GLIDEROL®
GARAGE DOORS

Opening doors around the world

Glidermatic GTS 2000®

Tilt and Sectional Overhead Door Operator

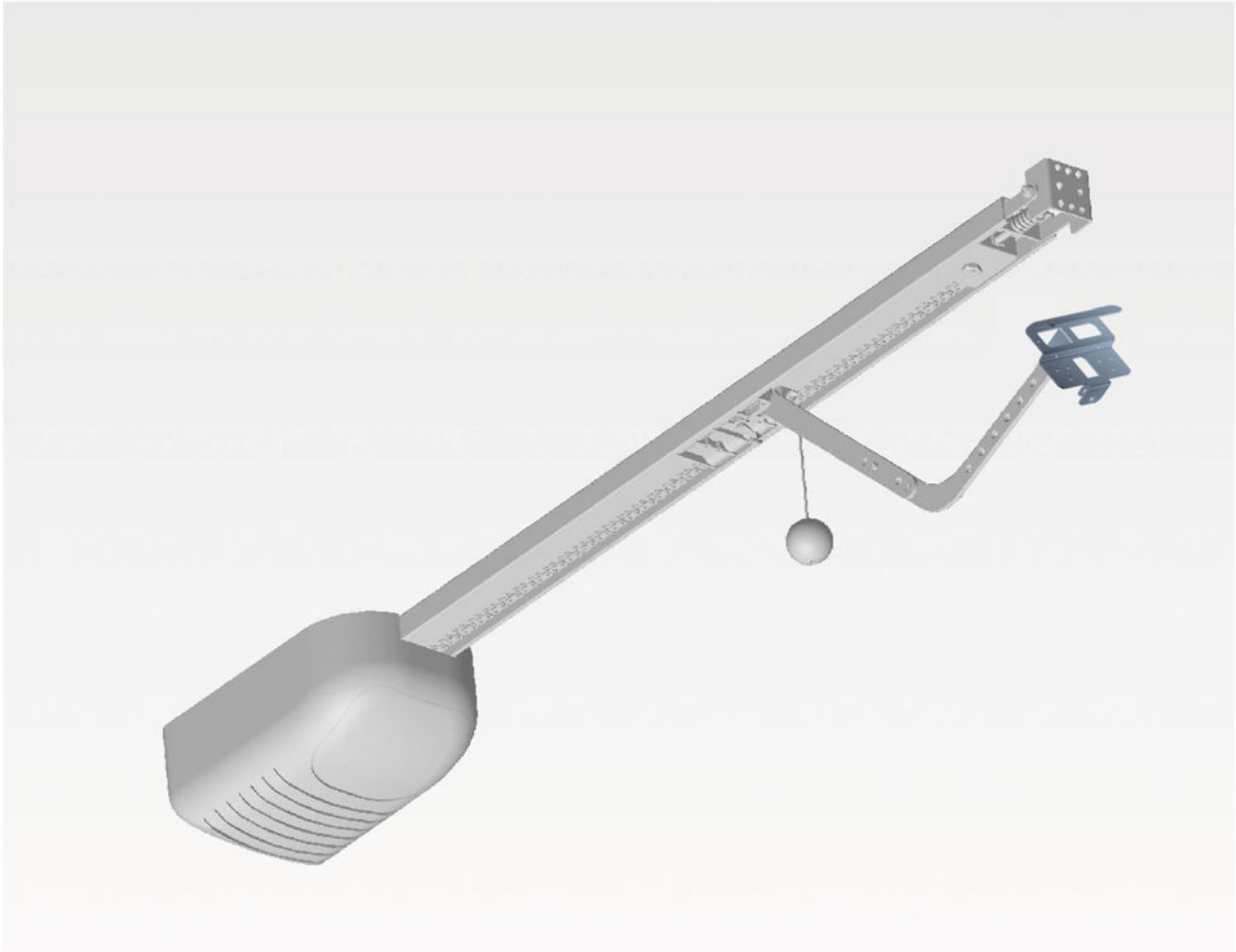

AU-GTS2000-1008

Installation Instructions and

Glidermatic GTS 2000® Owners Manual

Important Information

Please keep these instructions safe for later reference.

Dear Customer,

We thank you for your decision to purchase this garage door operator.

Attention: Important instructions for safe installation:

Incorrect installation could give rise to serious injuries. Please follow all installation instructions carefully!

In the interests of human safety it is vital that all these instructions be followed in full.

Keep hand transmitters well out of the reach of children.

Garages without a second entrance require an emergency release, the function of which must be checked once a month.

Do not allow anyone to hang bodily from the pull cord of the manual release.(Danger of bending)

Always cover up the operator before drilling.

Electrical installation on site must comply with the relevant safety regulations (240 V AC, 50 Hz).

Electrical connections must only be carried out by a qualified electrician!

This garage door operator is designed only for the automatic operation of spring-balanced up-and-over doors and sectional doors for domestic use only.

The manufacturer is exempt of any guarantee obligations and product liability, when the customer undertakes improper installation work or arranges for same to be carried out contrary to the installation guidelines provided. Any changes carried out, only with the manufacturer's prior approval.

Batteries and light bulbs are not covered by the guarantee.

Any further processing must ensure that the national regulations governing the operation of electrical equipment are complied with. Moreover, We shall accept no responsibility for the inadvertent or negligent operation or improper maintenance/servicing of the door, the accessories and the garage door operator.

The operator is not suitable for heavy duty,applications i.e. doors that can no longer be opened or closed by hand. Or where this is only possible with great difficulty. Before installing the operator, the door must move easily by hand.

Before installing the operator, ensure that the mechanics of the entire door system are in perfect working order. Before the operator is fitted, any of the door's mechanical locks and latches must be immobilised.

The door operator may not be used if repair or adjustment work is to be carried out.

The construction of the garage ceiling must be such, that safe, secure anchoring of the operator is guaranteed.

Permanently installed controls (e.g. buttons or similar devices) should be installed within sight of the door. Keep the controls away from any moving parts and at a height of at least 1.5 metres. It is important that they be installed well out of the reach of children. Warning notices about the trap risk must be permanently fixed in a conspicuous place or near the permanently installed buttons used to actuate the operator.

Please keep these instructions safe for later reference.

The operator is designed for use in dry environments and therefore must not be installed exposed to weather.

In carrying out the installation work, the applicable regulations regarding working safety must be complied with.

Make sure that the cable of the operator's manual release cannot get caught up in the roof carrier system or in any other protruding parts on the vehicle or the door.

Always ensure, that no persons or objects are located within the travelling range of the door. Initial function checks, as well as programming or extending the remote control, has to be carried out from inside the garage.

Instructions for using the operator:

Before carrying out any work on the operator, disconnect the mains plug.

All persons using the door system should be instructed how to use the operator safely and properly. Demonstrate and test the automatic reversing as well as the manual release. With the garage door open, check the function of the manual release once a month.

Attention:* **DANGER** * a door with weak, broken or defective springs or an inadequately counterbalanced door can quickly close on its own accord.

Only operate the door, when the door's range of travel is within your field of vision. Wait until the door has come to a complete halt. Move only, when the door has come to a complete standstill. Before driving in or out of the garage, make sure that the door is fully opened and has ceased travelling.

Maintenance Instructions:

We advice you to make a complete check of the door system once annually. It is recommended that you have your door and operator serviced by a qualified technician once every 24 months.

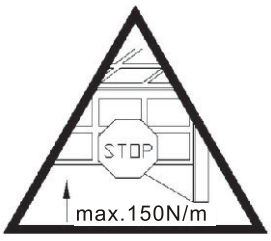

GLIDEROL® GARAGE DOORS
Opening doors around the world

Technical Data

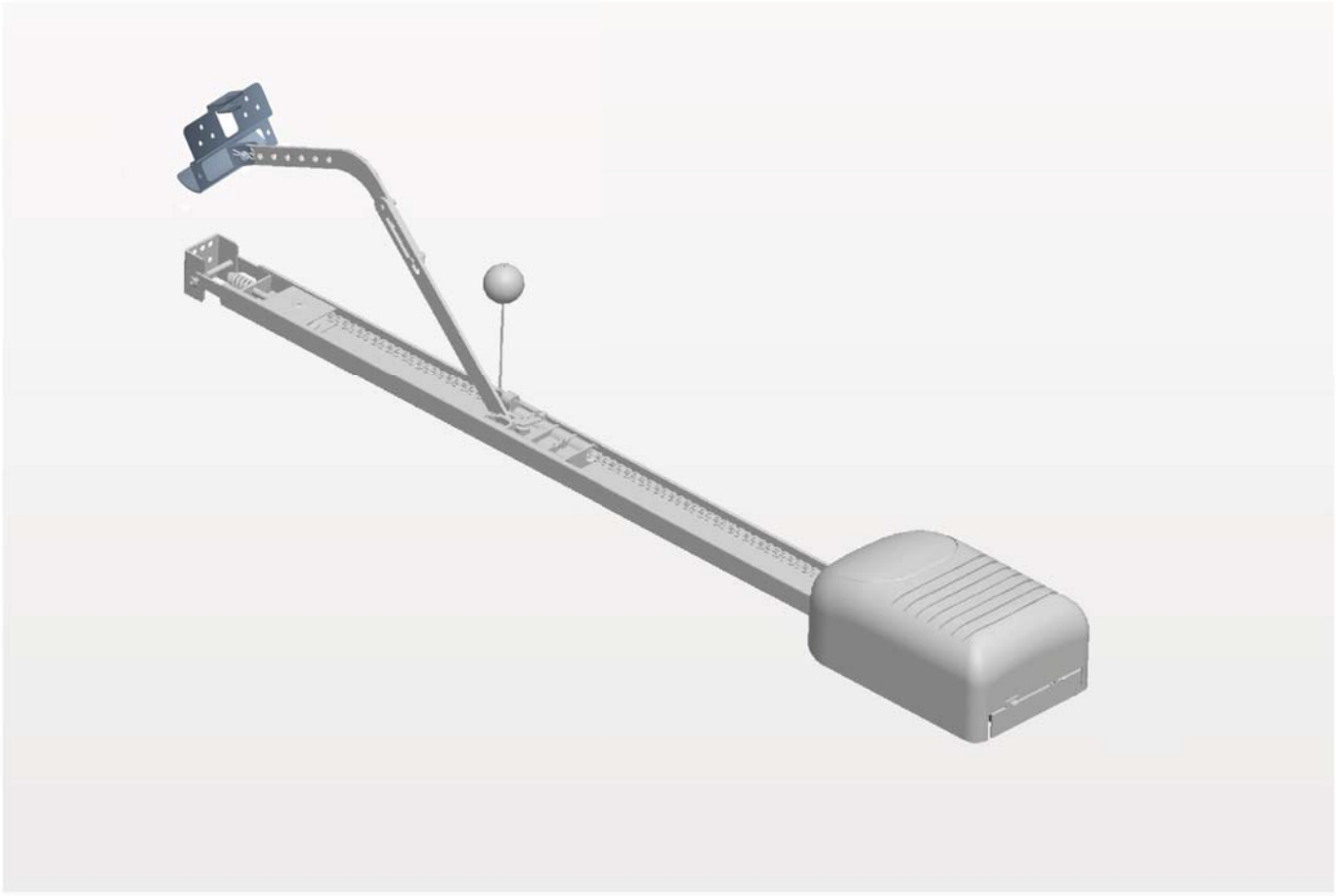

Power Supply	240V 50Hz
Motor	180W DC 24 Volts
Force	700 N
Running time	Max. 30 cycles / hour
Speed without load	Approx. 14cm/ sec.
Clearance for operator	40mm
Drive mechanism	Chain
Overall length	3210 mm
Approx. Weight	~ 18kg
Max. door opening (3.1m shaft)	2400mm
Optional 3.4m & 3.7m shafts available	
Max. door size	$18m^2$
Circuit board	NGTSV2 REV:A
Standby Power Consumption	7W

Itemised Description of Parts:

Item	Part Name	Product Code	QTY
1	L-Section Foot Mounting Bracket	1371	2
2	Boomerang Arm	1363	1
3	Boomerang Extension Arm	1370	1
4	Universal Hinge Bracket	1358	1
5	Thrust Block & Push Arm	1430	1
6	Shaft - 3.1m	1416	1
	- 3.4m	1420	
	- 3.7m	1421	
7	Lintel Bracket	1373	1
8	Shaft Bracket	1366	1
9	Chain Tensioning Block		
10	Powerhead	1417	1
11	Manual Release Cable	1424	1
12	Chain Location Clip	1368	1
13	Transmitter TM305	5087	3
14	Dual Purpose Transmitter Cradle	5094	1
15	Chain - 3.1m	1426	1
16	Shaft Support Bracket	1372	1

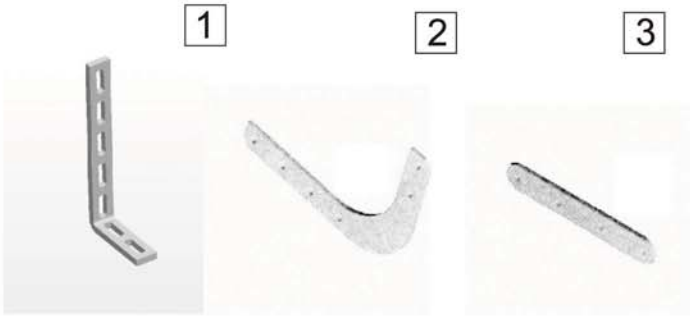

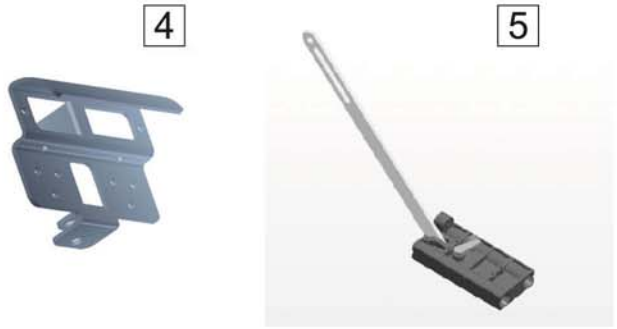

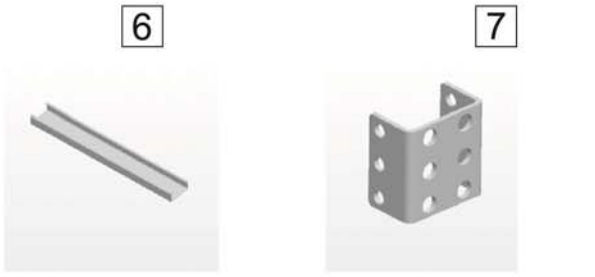

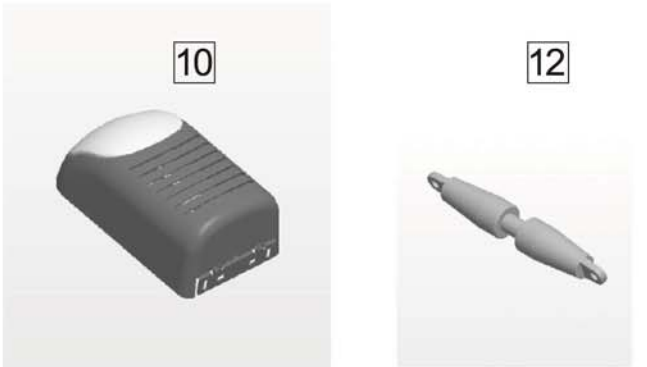

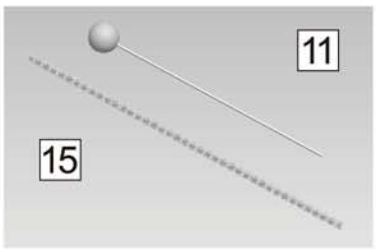

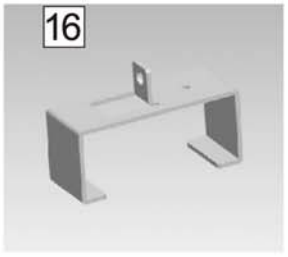

GLIDEROL® GARAGE DOORS
Opening doors around the world

Deactivate all garage door locks

Tilt Door

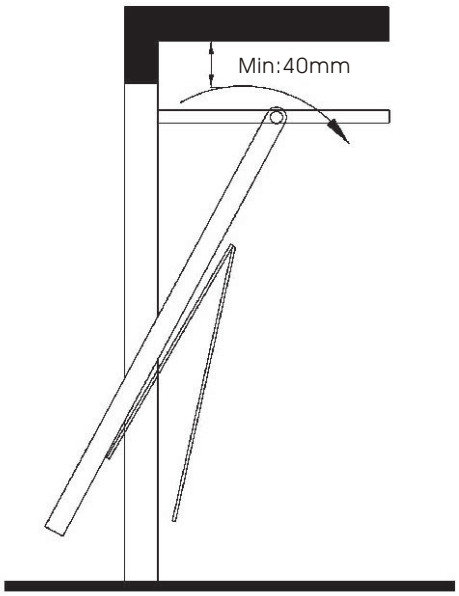

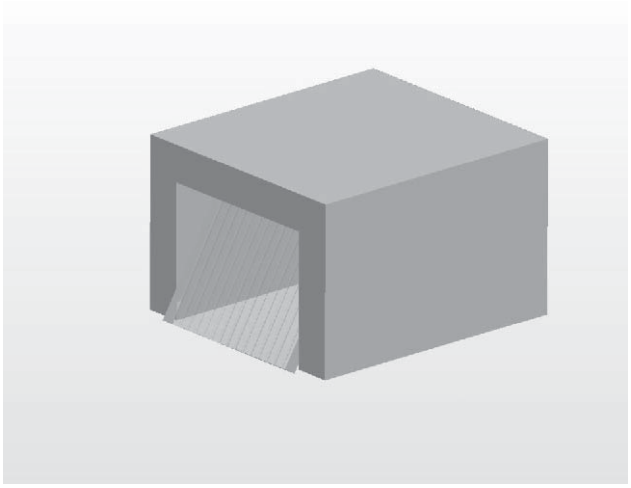

Sectional Door

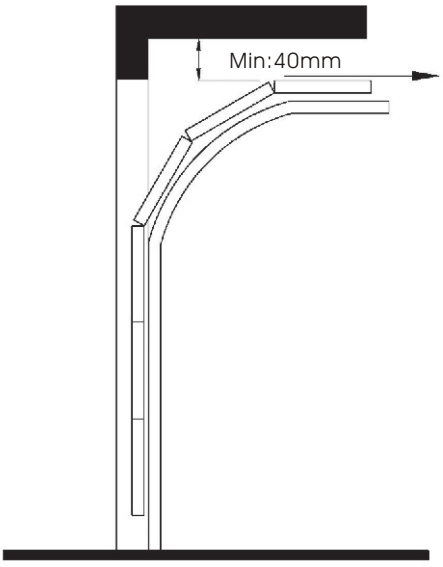

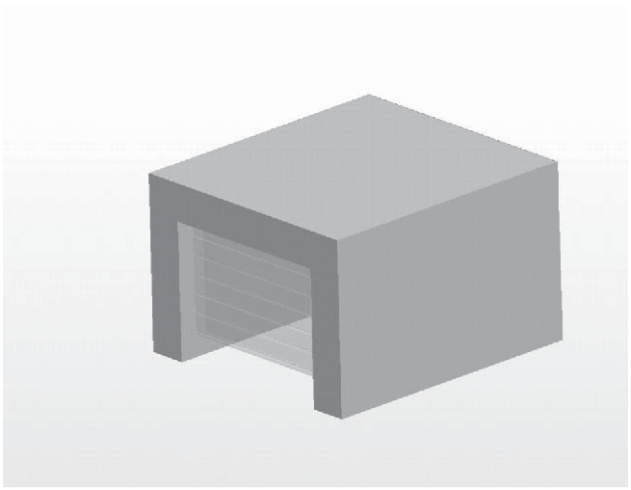

Tilt Door

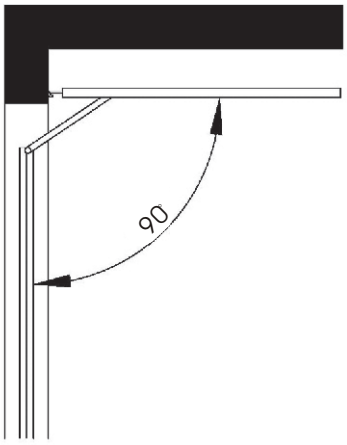

Sectional Door

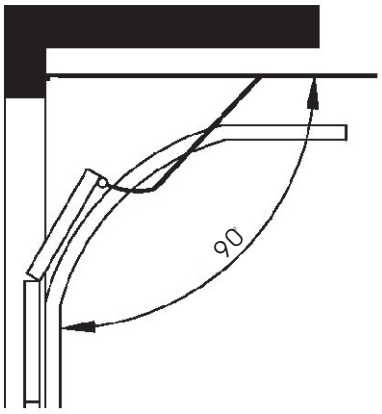

Before starting to determine which type of door you have, this background depicts an ideal installation and can be scale.

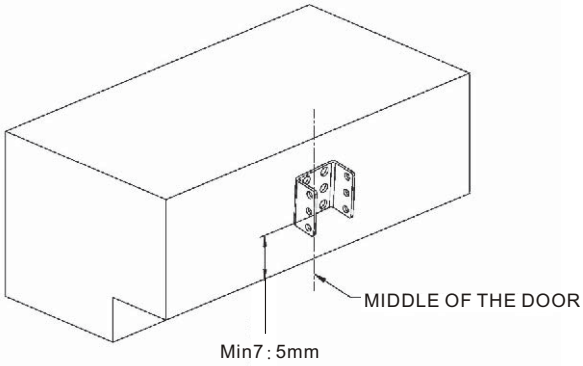

It is essential the door header be substantial as nearly all the force generated by the opener is concentrated via the header bracket. Determine the centre of the door and continue this vertical line through the header. Open the door and find the highest point to which the top of the door reaches, using an appropriate straight edge and level. Transfer this height to the header. Allow from 8-10mm clearance between the drive shaft and the door. Place the bottom of the header bracket at the height determined, fixing with the screw/s supplied. Headroom requirements and the need to avoid obstruction sometimes make it necessary to move the bracket higher.

GLIDEROL®
GARAGE DOORS
Opening doors around the world

Insert carriage in shaft.

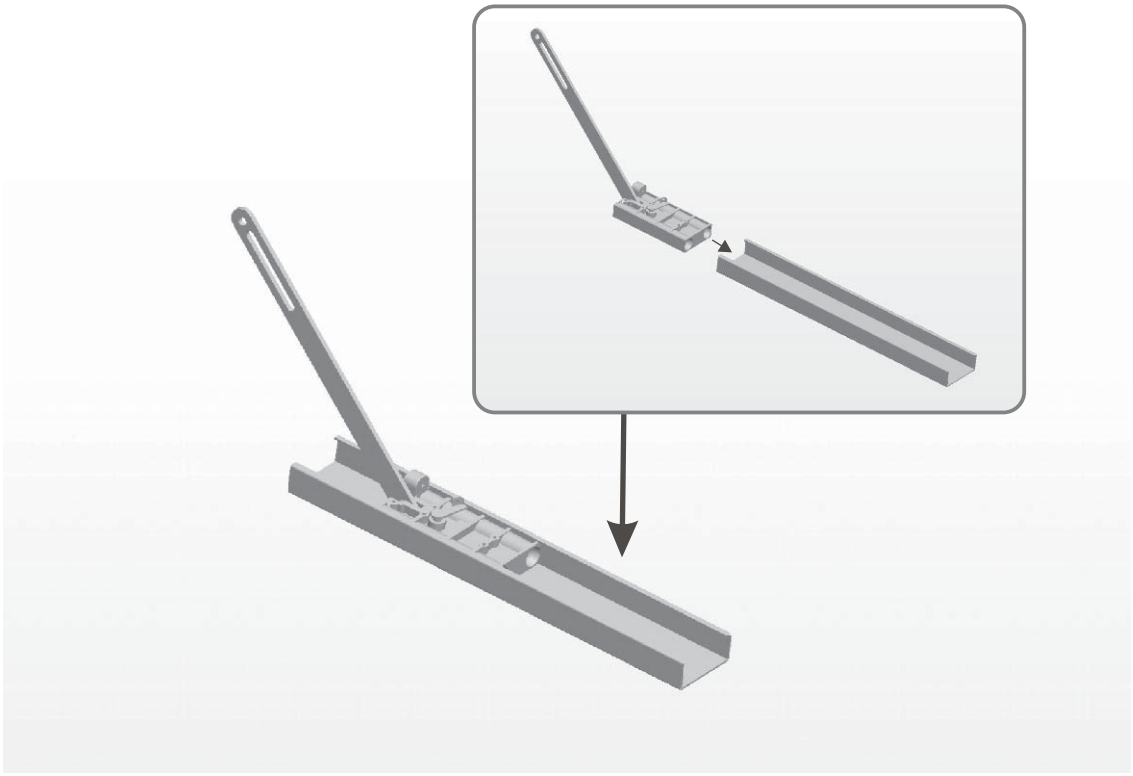

Install chain as direction shown around tensioning pulley.

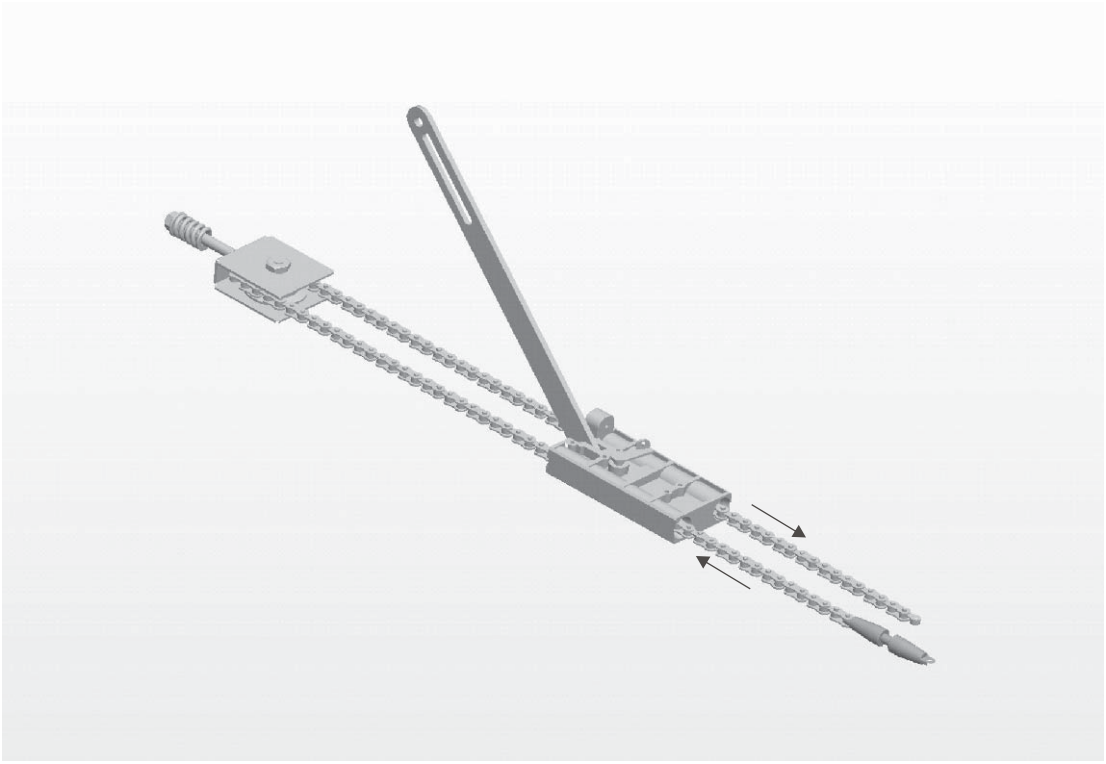

Link chain at correct length.

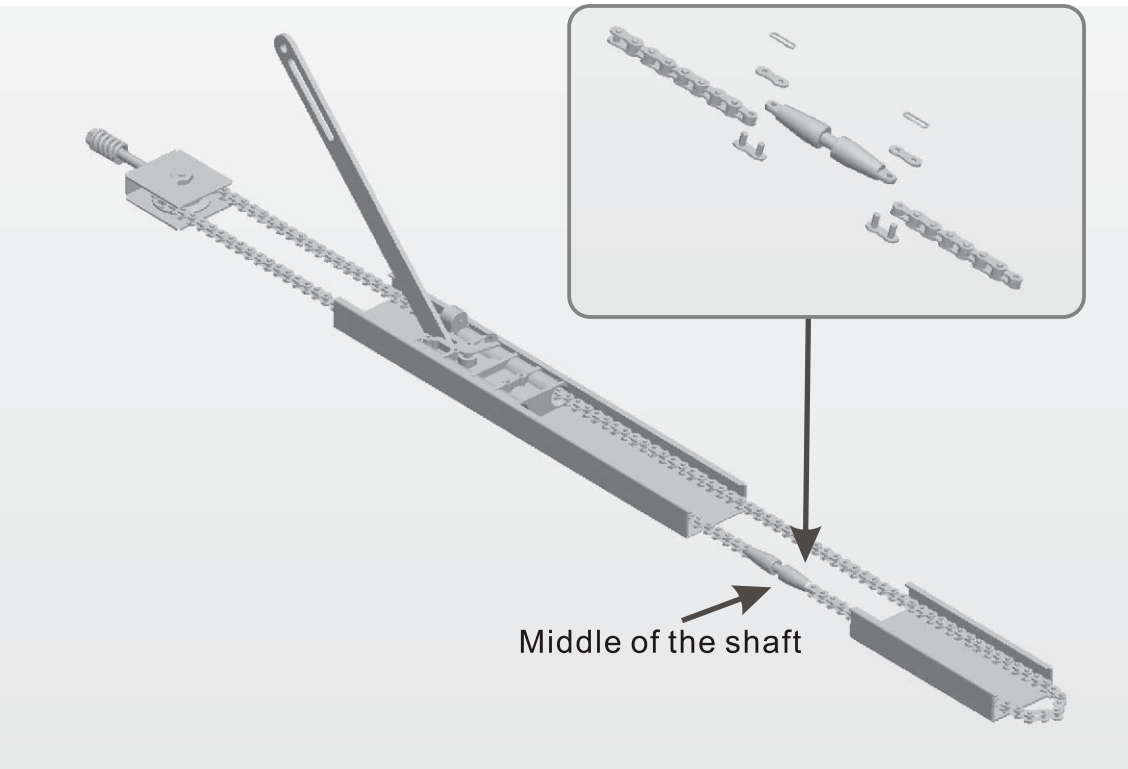

Insert tensioning pulley to end of shaft

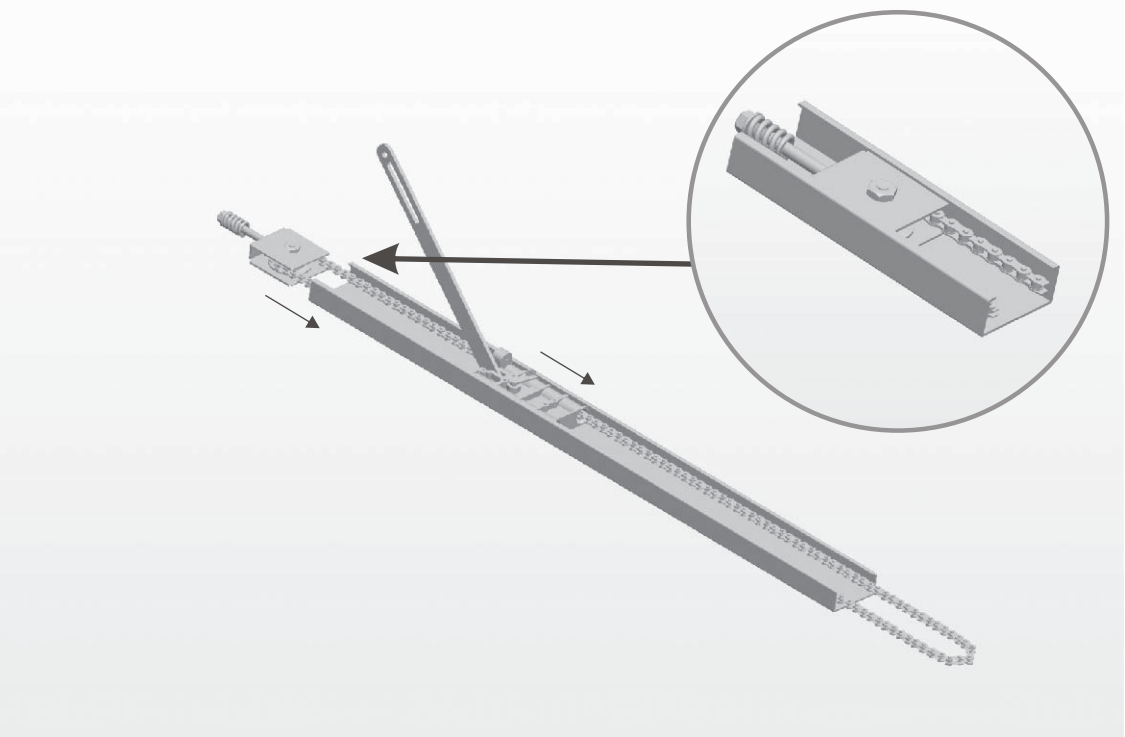

GLIDEROL®
GARAGE DOORS
Opening doors around the world

Installation Instructions

Remove drive sprocket protection lid. Slide shaft and chain into powerhead chassis and then place chain over powerhead drive sprocket.

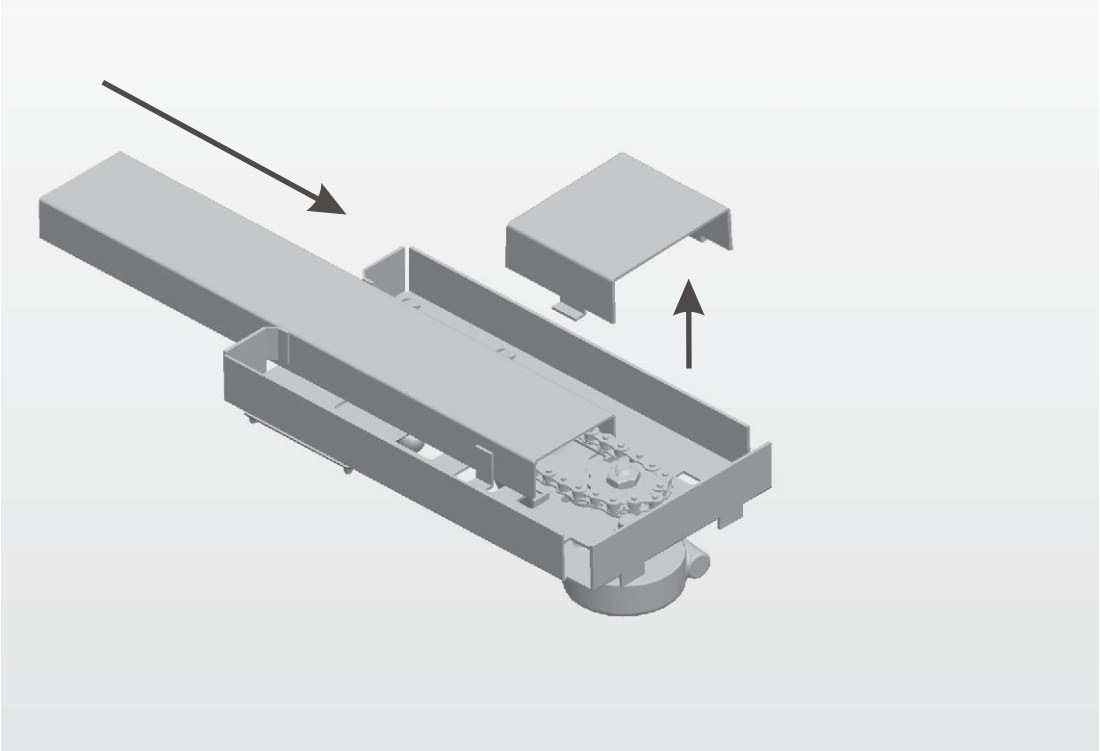

Place powerhead on the garage floor, being careful not to damage or scratch the paintwork and attach shaft end bracket assembly to header bracket using nuts and bolts supplied.

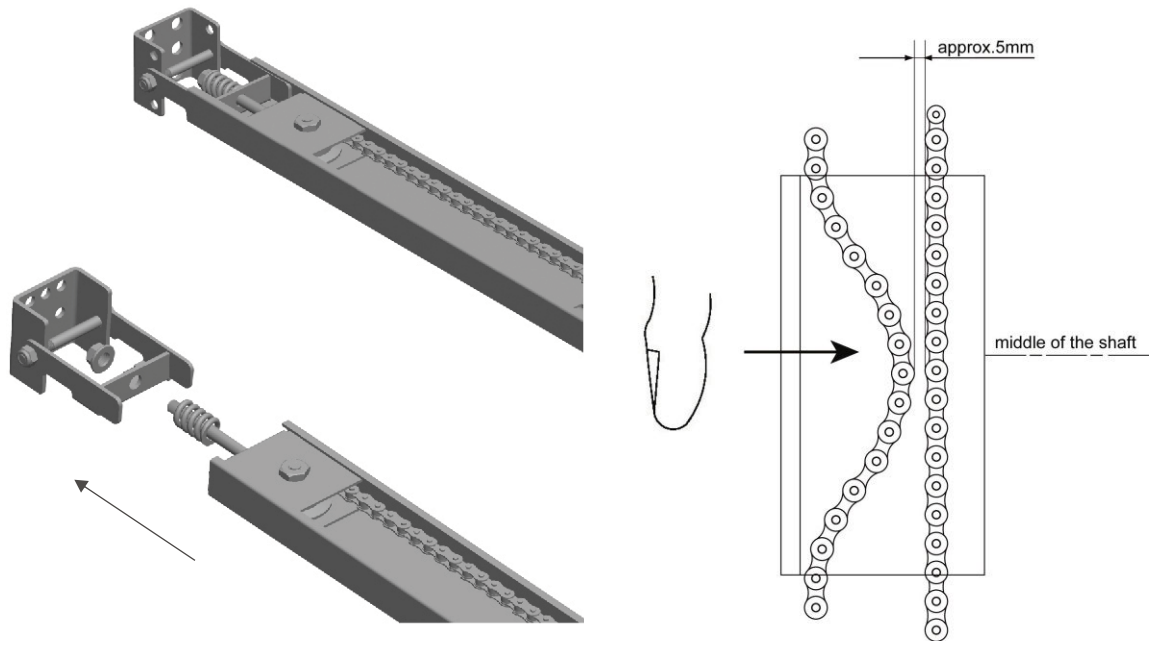

Fit drive sprocket protection lid as per diagram.

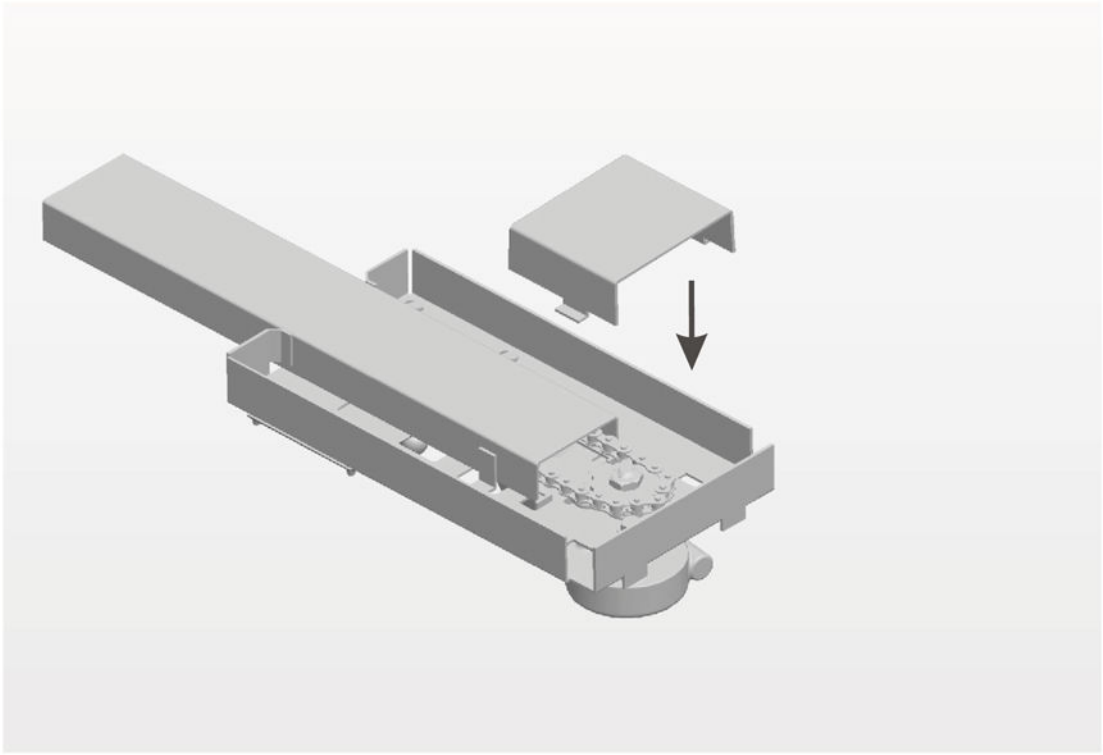

Boomerang arm should not be used on tilting type doors. For sectional door, mount door bracket on top of door panel, ensuring a tek screw is fitted to centre stile.

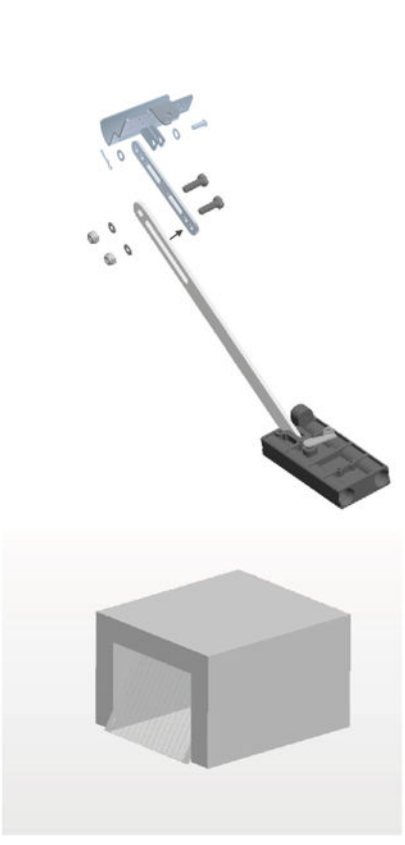

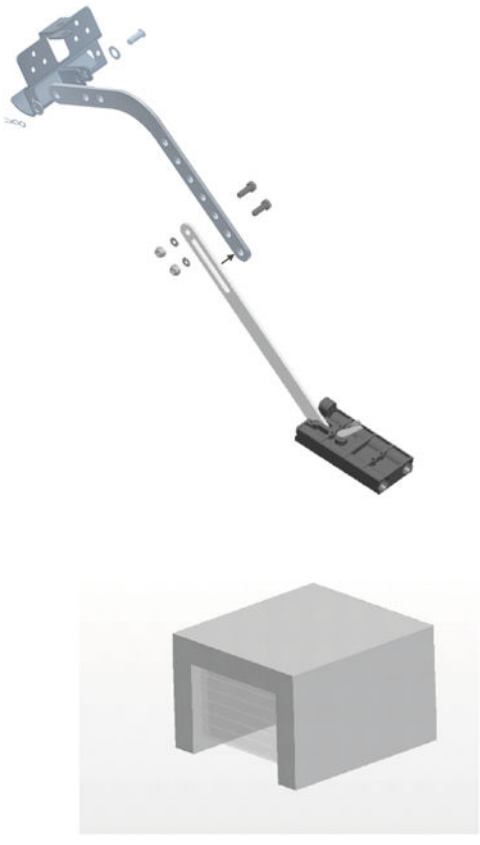

GLIDEROL®
GARAGE DOORS
Opening doors around the world

Installation Instructions

Raise powerhead and support on step ladder. Raise the door to open position, align the drive shaft with the point market at the top of the door. Exact alignment is essential.

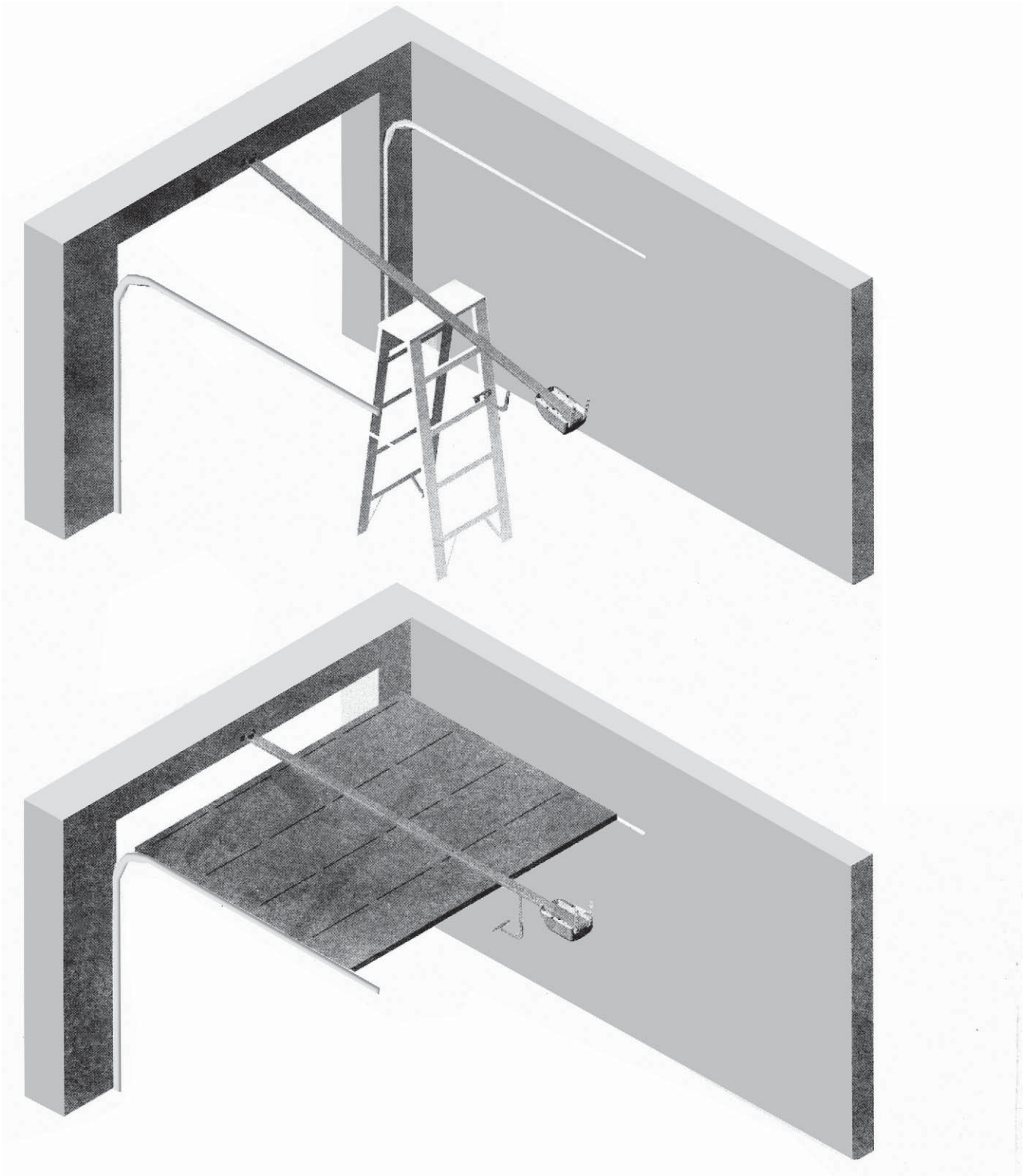

To secure the opener support powerhead in the manner shown using brackets supplied or fix directly to roof as in diagrams (a) & (b).

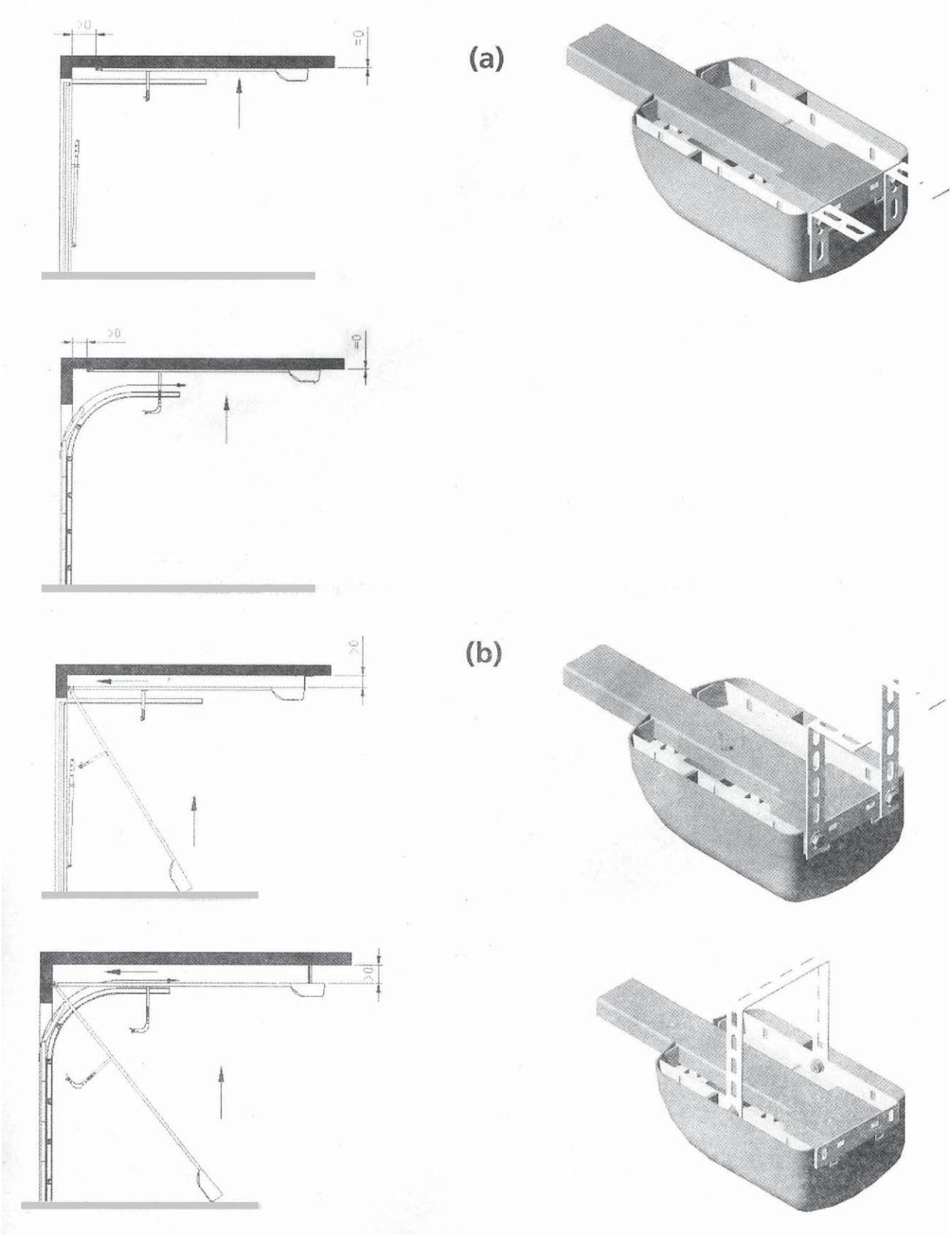

GLIDEROL® GARAGE DOORS
Opening doors around the world

Disengage Auto Operation

Test shaft in manual operation

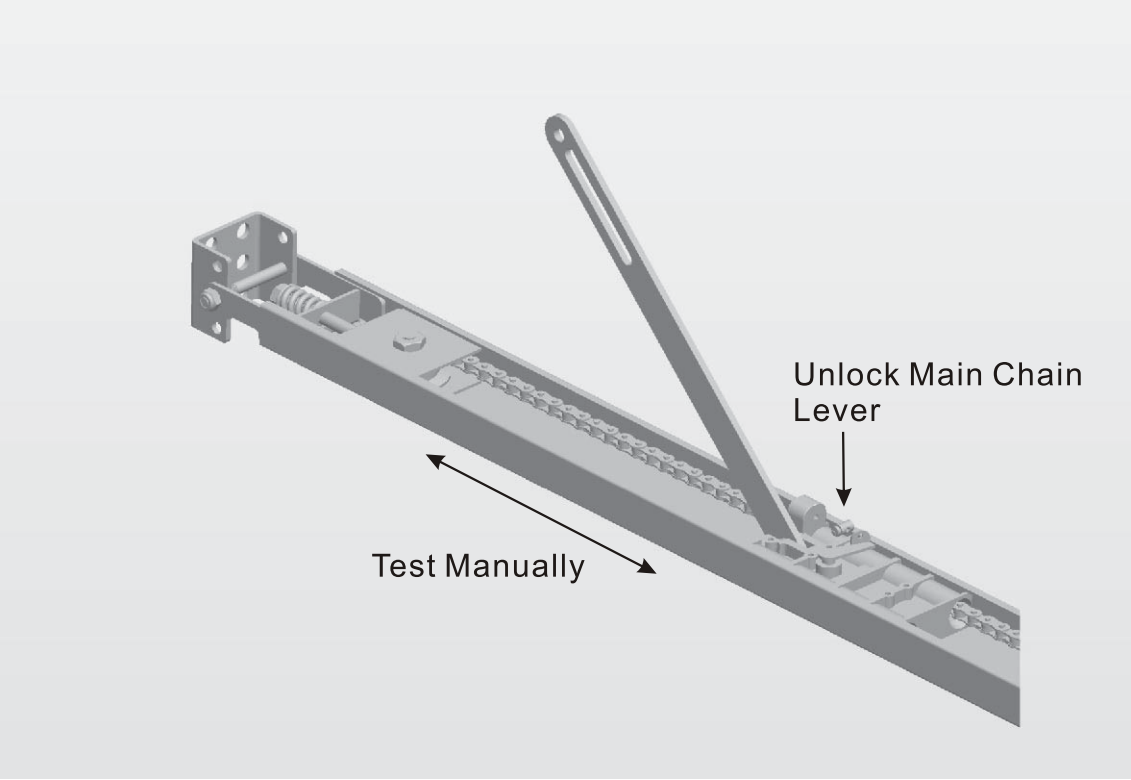

Glide carriage forward and attach pusher arm to door bracket, as shown on page 15.

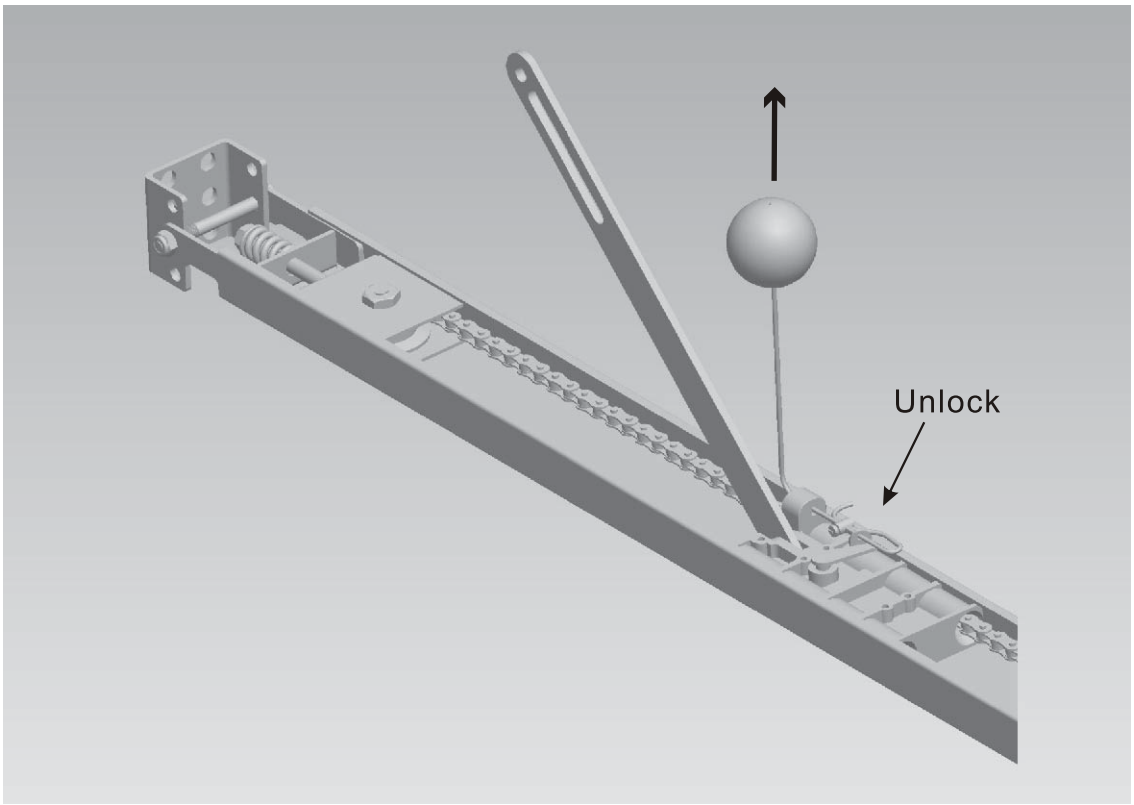

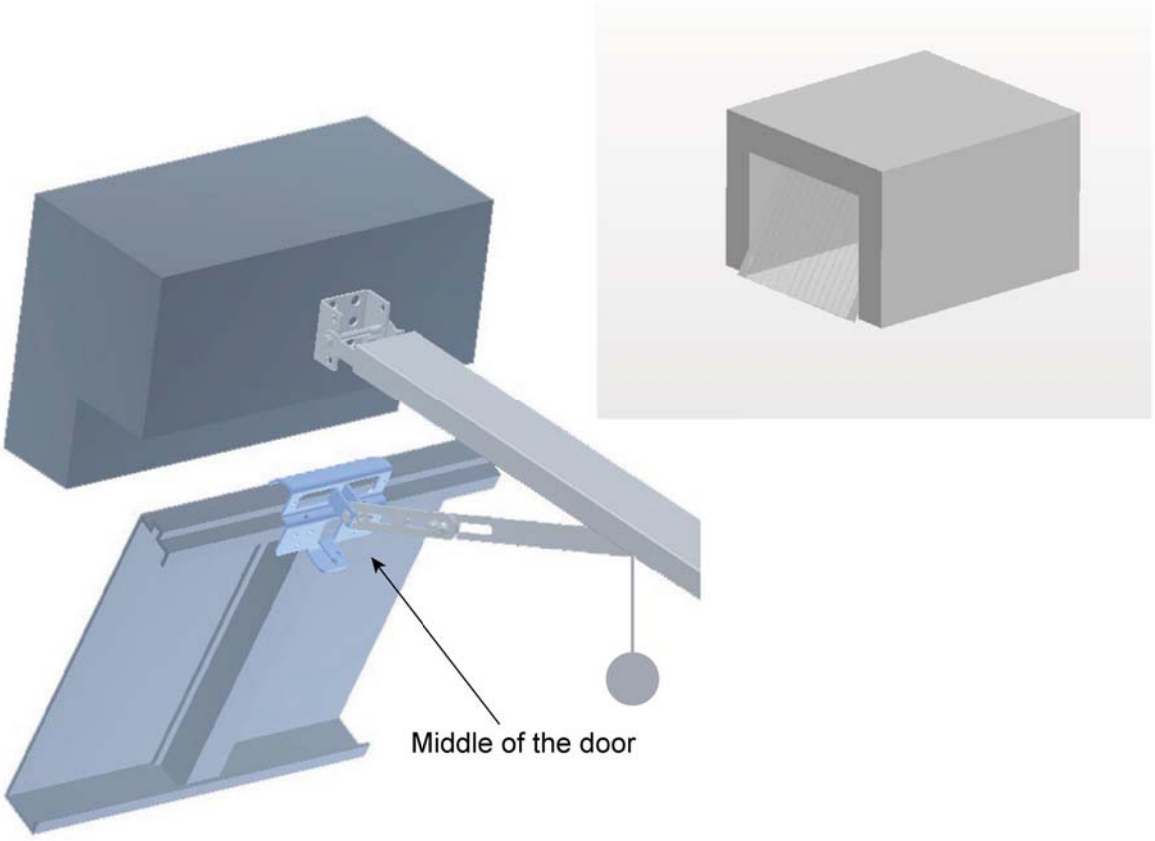

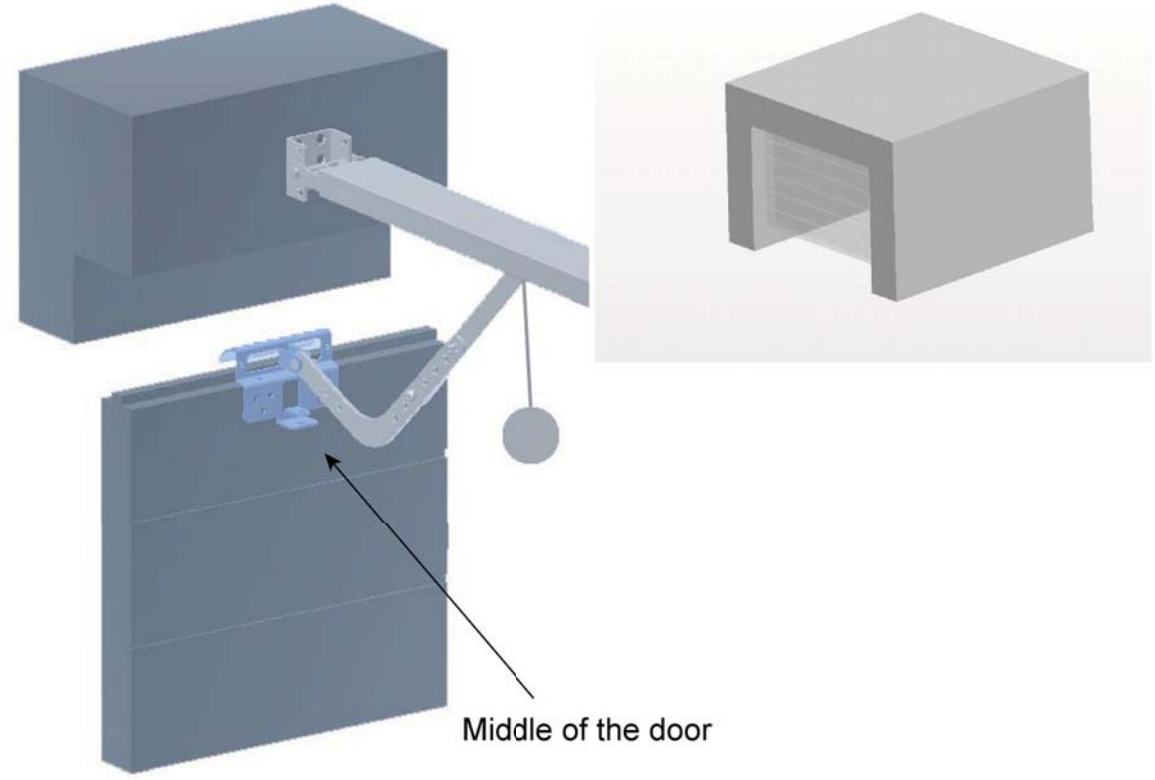

GLIDEROL®
GARAGE DOORS
Opening doors around the world

Disengage Auto Operation

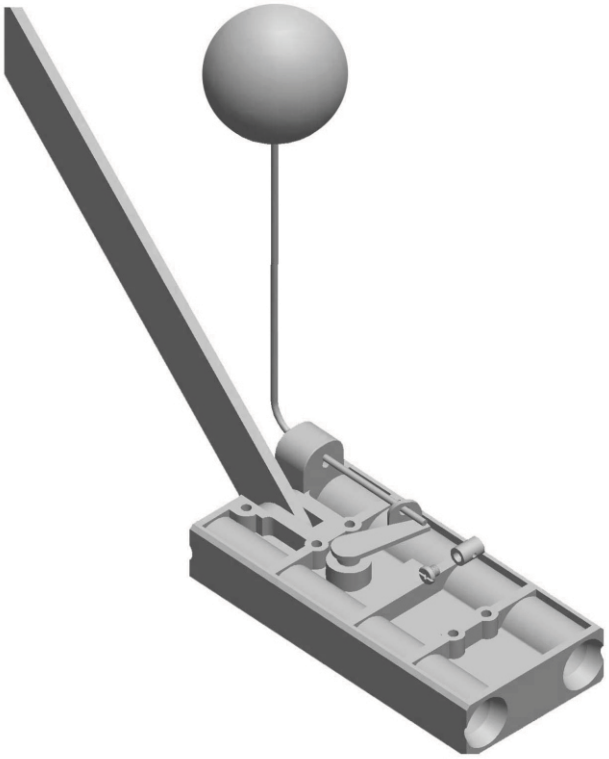

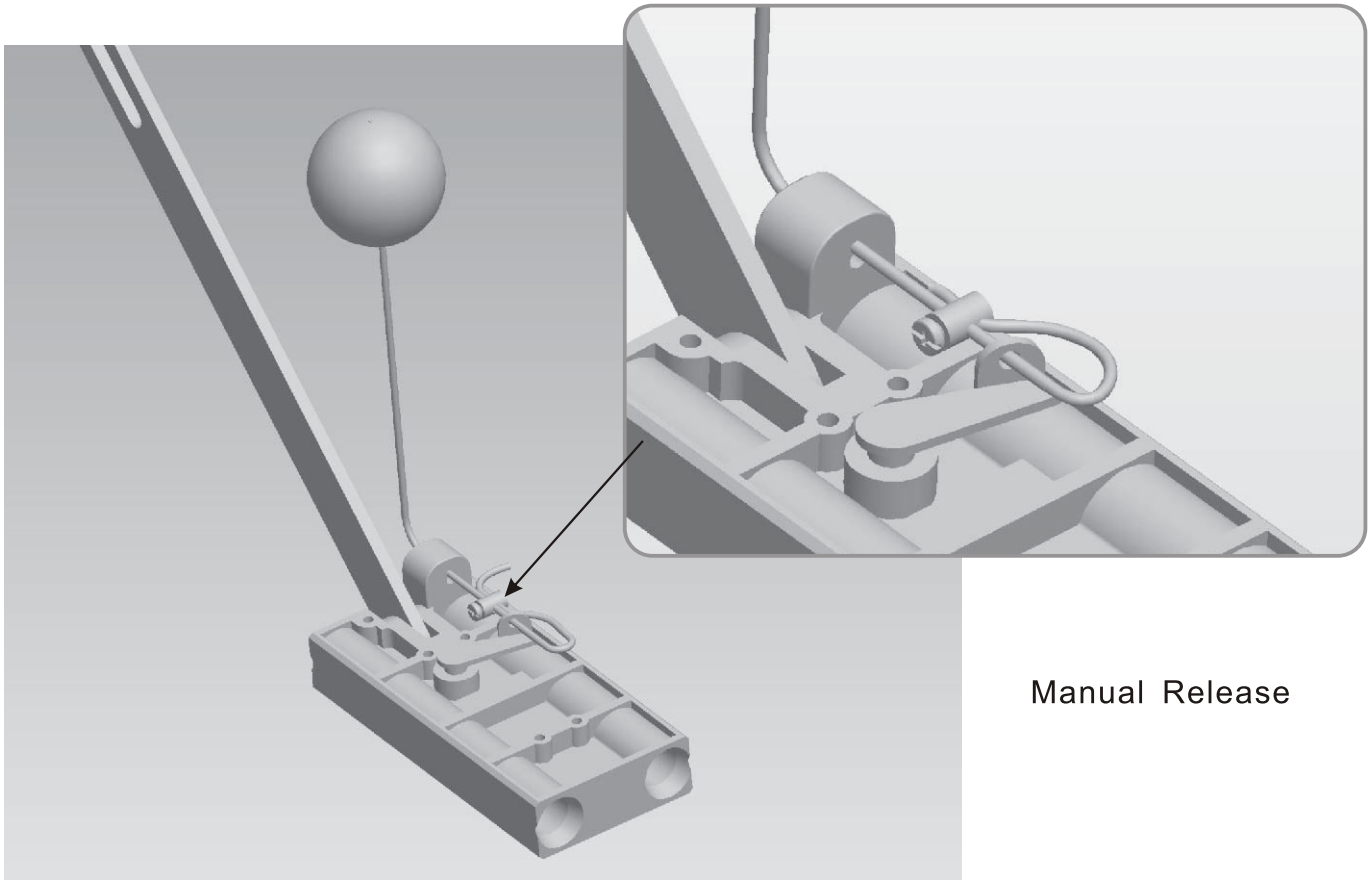

Manual Release

Option 1: Through PCB located in GTS powerhead

PCB

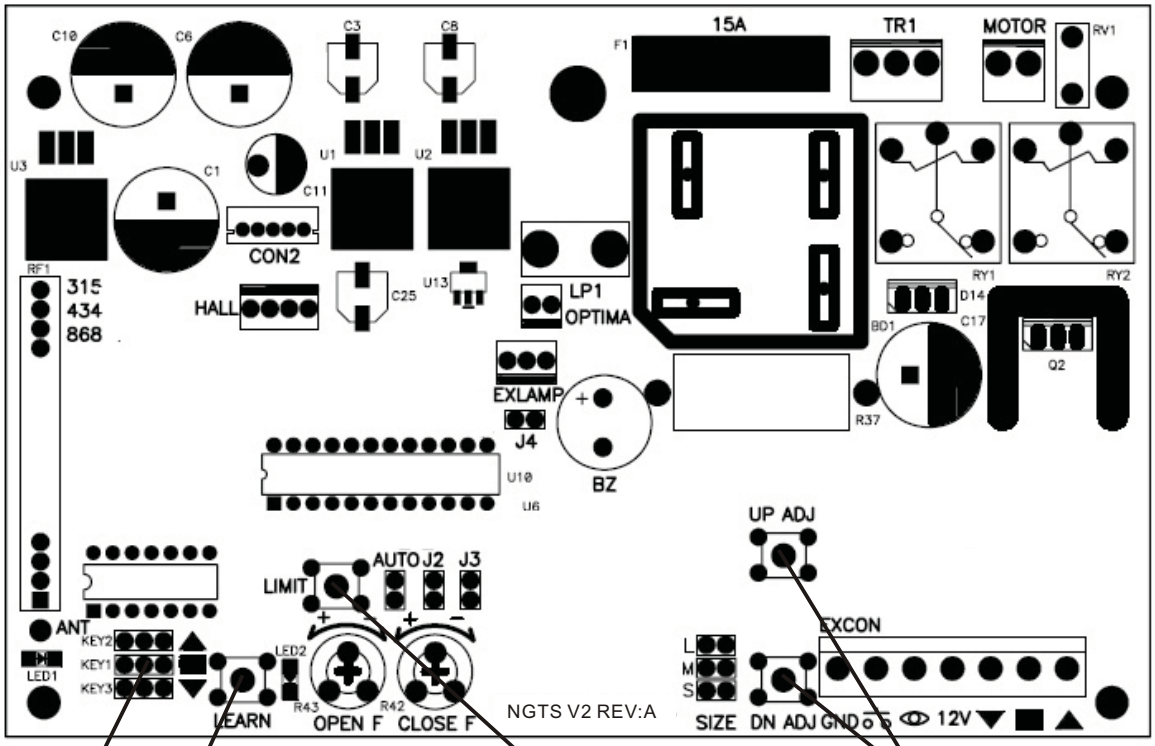

Procedures :

1. Carefully remove the light cover by pulling down on tab at front of unit.
2. Press and hold **LIMIT button [1]** for 3 seconds to begin limit setting mode. Unit will beep 3 times.
3. Raise the door to the open position using press and hold **UP ADJ button [2]**. To fine adjust this position use buttons **UP & DN ADJ** (if the door is already in desired opened position proceed to step 4)
4. Press **LIMIT button [1]** once to confirm this position. Unit will beep twice to confirm the top position is set.
5. Lower the door to the closed position using press and hold **DN ADJ button [2]**, fine adjust using buttons **UP & DN ADJ**. Ensure the door doesn't hit the ground hard, maintain 5mm gap between door and floor.
6. Press **LIMIT button [1]** to set this position. Unit will beep twice to confirm limit is set. The door will travel between the limits once.
7. Replace light cover.

GLIDEROL® GARAGE DOORS
Opening doors around the world

Option 2: Through Handset (Transmitter)

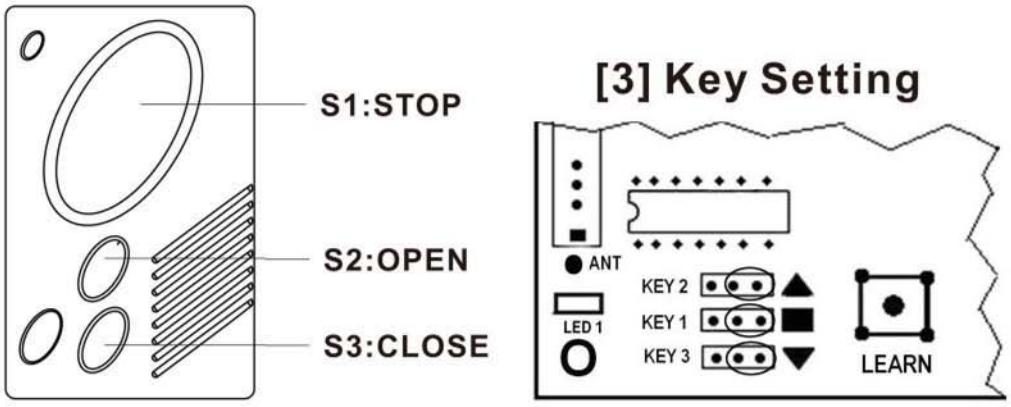

Procedures:

1. Please ensure all 3 jumpers are on the right hand side of **[3] Key Setting.**
2. Press and hold buttons 1 & 3 simultaneously. Hold for 3 seconds until power head beeps 3 times.
3. Raise the door to the open position using press and hold button 2. To fine adjust this position use button 2 & 3 (UP & DOWN) (if the door is already in desired opened position proceed to step4)
4. Press button 1 to confirm this position. Unit will beep twice to confirm the top position is set.
5. Lower the door to the closed position using press and hold button 3, fine adjust using buttons 2 & 3 (UP & DOWN)
6. Press button 1 to set this position. Unit will beep twice to confirm the closed position is set.
7. The door will travel between the limits once.

Note:

1. Please refer to Transmitter Key Setting instructions to reconfigure the desired operation key(s).
2. Controller will automatically exit limit learning mode if there is no action after 60 seconds.
3. All procedures must be carried out to restart learning process. For example, if a mistake is made when learning TOP LIMIT after confirming, all of the subsequent steps must be carried out prior to relearning the TOP LIMIT again.
4. If controller signals with two beeps upon button press, procedure were not performed correctly, please restart the limit learning procedure.
5. When setting the TOP LIMIT, an overload sensing feature is built in to prevent damaging the control gear.

Setting Obstruction Sensing and Automatic Reversing

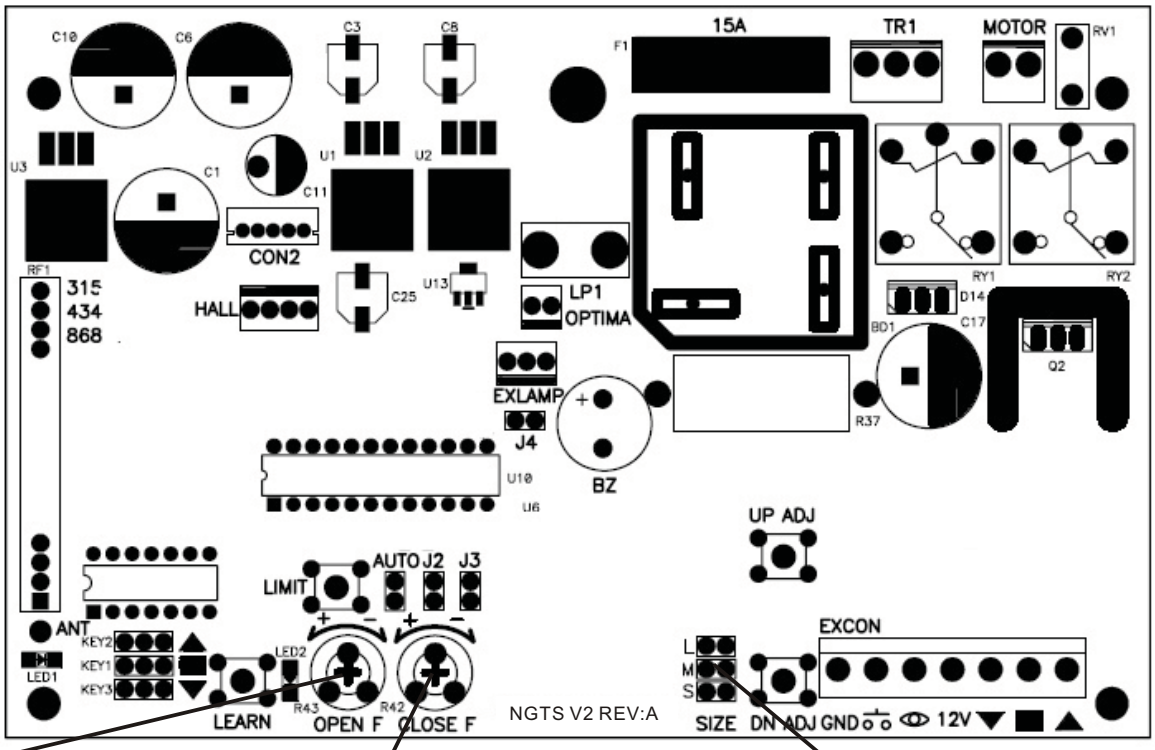

4	Open Force Adjustment	5	Close Force Adjustment	6	Door Size

Door Size Setting:

1. The door will auto-reverse when an obstacle is encountered to prevent injury due to the obstruction and damage to the door. Link **[6] SIZE** should be first set to match door size (S/M/L).

Force Setting:

1. Adjust both **[4] OPEN F** and **[5] CLOSE F** Obstruction Detection Pots to Maximum (Fully clockwise)
2. To set OPEN Force, open the door with the onboard **[2] UP ADJ** button. Whilst the door is opening turn the **[4] OPEN F** pot slowly anti-clockwise until an overload condition occurs i.e. door going up stops before reaching the set top limit.
3. Now adjust the **[4] OPEN F** pot 10 degrees in the clockwise direction.
4. To set CLOSE Force, close the door with the onboard **[2] DN ADJ** button. Whilst the door is closing turn the **[5] CLOSE F** pot slowly anti-clockwise until an overload condition occurs i.e. door going down auto-reverses before reaching set bottom limit.
5. Now adjust the **[5] CLOSE F** pot 10 degrees in the clockwise direction.
6. Cycle the door a few times ensuring an overload condition is not registered during normal operation. If an overload condition is registered re adjust the corresponding **OPEN F** or **CLOSE F** pot a further 10 degrees in the clockwise direction.

GLIDEROL® GARAGE DOORS
Opening doors around the world

Transmitter Key and Code Setting

Refer to pcb Index on Page 17

Key Setting

Choose the Transmitter key configuration (Key 1. Key 2. Key 3) from the following:

Single door installation (A)

Key 1

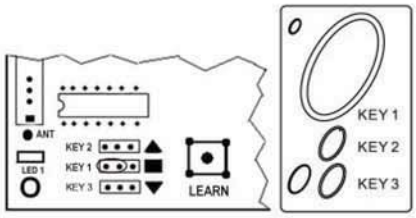

The above jumper configuration will allow Key 1 on the hand transmitter to be programmed.

Note: The jumpers are located on the Powerhead Printed Circuit Board. (Key 1. Key 2. Key 3)

Single door Installation (B)

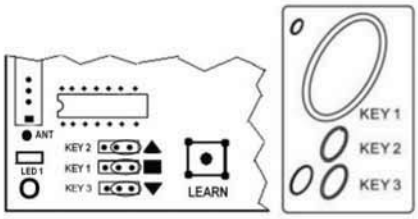

This above configuration uses all three keys

▲ Up Key 2

■ Stop Key 1

▼ Down Key 3

Two or Three door installation

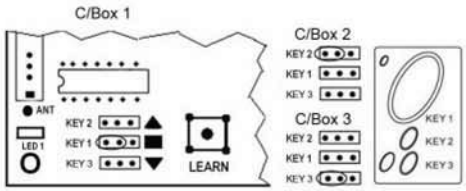

Two or Three door installation

Door 1

Jumper configuration for transmitter Key 1 only

Door 2

Jumper configuration for transmitter Key 2 only

Door 3

Jumper configuration for transmitter Key 3 only

Code Setting

Once the Key configuration is set you can now program in the security code from your hand transmitter (s)

- Press the learn code key once
- Learn LED indicator will light
- Press the hand transmitter Key 1 that will operate the door eg: for single door installation (A) you would press Key 1
- Learn LED will go out
- The hand transmitter is now programmed

Multiple Hand Transmitters

Repeat the above instructions for any subsequent Hand Transmitters.

The Control Module has enough memory for up to 15 individual Hand Transmitters.

If more than 15 handsets are learnt the FIFO (First In First Out) system applies ie first Hand transmitter code learnt will be deleted and replaced by the last Hand Transmitter code learnt.

Deleting Hand Transmitters From Memory

Press and hold the learn code key for 5 seconds.

All transmitter codes held in the memory have been erased.

Note: If a transmitter is lost or stolen please erase the memory and re-learn any spare or new transmitters.

Key Ring Transmitter

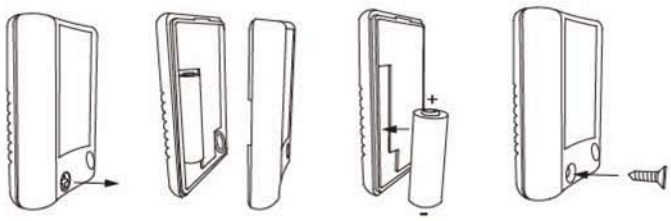

Battery Type 12V (A23)(ALKALINE BATTERY)
The battery should be replaced every 12 months.
To reassemble:

- Holding the front cover of the remote in one hand remove the screw on the back case using philip head screw driver.
- Replace the old battery with new 12 Volts (A23 Alkaline) Battery Negative towards the screw.
- Locate the Back case and secure with screw.

GLIDEROL® GARAGE DOORS
Opening doors around the world

Owner's Manual for Glidermatic GTS Tilt and Sectional Door Opener

CONGRATULATIONS! You have purchased the best Tilt and Sectional Door Opener available for residential and light industrial use. Gliderol Garage doors Pty. Ltd, has many years experience in the manufacture of tilt and sectional doors and are world renown for their award winning roller door which has been granted the Industrial Design council of Australia Award with many of its operational features highly recommended by the council's assessment panel. ie drive and control systems of the Glidermatic GRD roller door are common to the GTS and have been approved by the Electricity Trust of South Australia and are contained in a Fully Insulated Enclosure. The GTS utilizes the most up-to-date sophisticated electronic circuitry and extensive use has been made of modern engineering polymers in their manufacture.

Gliderol Garage Doors Pty Ltd have had many years experience in the manufacture of Tilt and Sectional Doors and their products are backed by extensive test programs ensuring that your GLIDERMATIC GTS opener should give you years of satisfactory service. The Power Head and control system utilizes the most up to date sophisticated electronic circuitry combined with modern engineering plastics. We recommend that you fully read this Owner's manual to acquaint yourself with the many safety and convenience features provided.

INDEX

	Page		Page
Door Operation	21	Additional Hand Sets	23
Transmitter Operation	22	Remote Push Button	23
Local Operation	22	External Lamp	23
Manual Operation	22	External Key Release/Switch	23
Unit Description	22	Emergency Instructions	23
Code and Operation Security	22	Photo Sensor Connection Diagram	24
Adding/Deleting a Hand Set	22	Remote Switch Connection Diagram	24
Automatic Reversing	22	Do's and Don'ts	25
Light Timer	23	How to Avoid Costly Service Calls	26
Automatic Delayed Closing	23	Warranty	27
Safety Features	23	Sales and Service	28

DOOR OPERATION

A tilt or sectional overhead door equipped with a Glidermatic GTS opener may be operated by any of the following three methods:-

(a) by using the hand held transmitter

(b) by a wall mounted press button or transmitter

(c) by manually by disengaging the drive unit via the manual release cable in case of power failure

WARNING - Ensure that the manual lock is not engaged when the Power Head is in the automatic position.

GLIDEROL® GARAGE DOORS
Opening doors around the world

Note that operating the automatic controls will either open or close the door by the same button press action, when the door is closing, a further button press will cause the door to reverse and a further button press will cause it to open again. When the door is opening, a button press will cause the door to stop at that position. The next button press will close the door fully.

The Glidermatic GTS, when used in automatic mode, securely locks the door closed. The normal T-Handle lock should not be engaged when the GTS is use to avoid damaging the unit.

TRANSMITTER OPERATION

Apply light finger pressure to the transmitter button for approximately 1 second to open or close the door. DO NOT hold the button down once the door has started to move.

FOR SAFETY AND SECURITY, THE DOOR SHOULD BE IN VIEW BEFORE OPERATING THE UNIT.

LOCAL OPERATION

The door may be operated locally via the use of the press button/transmitter mounted strategically on the garage wall or in the house. Press the button for approximately 1 second to open or close the door.

MANUAL OPERATION

All Tilt and Sectional doors when equipped with the Glidermatic GTS unit are designed to give satisfactory operation when reverting to manual mode. In an emergency (loss of power) disengage the drive by pulling the manual release cable and open your door manually. Remove the plug from the power socket. Re-engagement of the manual release is by returning the door to the chain locating clip where by it will lock the thrust block into auto mode. To reengage the door to automatic operation, move the door manually up or down until it locks to the thrust block.

UNIT DESCRIPTION

The Power Head operates through an electric motor which powers the gearbox which drives the enclosed chain and all components are mounted in self-lubricating nylon to minimise maintenance. A lid covers the control board which has settings to program the remote and set door travel limits which is usually set during installation, further adjustment should not normally be necessary but when required the lid might be removed to access these controls.

The Power Head contains a transformer which reduces the domestic supply down to 24 volts to ensure your safety at all times. Also contained here is the printed circuit board with the radio receiver and logic which control the operation of the door and the courtesy light. Externally, there is a press button for door operation without the transmitter and the courtesy light to illuminate the garage. Other than replacement of the plug in bulb (24v 9watt), there are no other owner serviceable components.

The transmitter is of a UV resistant material with up to 3 functioning buttons to suit multiple entrances. See illustration of transmitter. Even though it is designed to withstand normal wear and tear the transmitter should not be left in the direct sun nor physically abused. A 12 volt battery provides the power for the transmitter and this is accessed by removing the screw in the rear of the case. A LED indicator light will glow when the transmitter button is pressed to send its signal to the receiver. It is recommended that the battery be changed every 6-12 months depending on usage or when the range becomes unreliable.

All adjustments and setting up procedures are to be carried out in conjunction with this manual.

CODING AND OPERATION SECURITY

All Glidermatic GTS Remote Control Units operate on an approved SMA frequency, through synchronised digital coding between control circuit board and the handset. The coding permits over 1 billion possible code variations.

ADDING / DELETING A TRANSMITTER

Each transmitter has a unique factory pre-set code which is learnt by the receiver. Refer to Flow Chart in this manual for directions to add or delete a transmitter. Access to the circuit board is gained by releasing the screw holding the front of the cover and carefully lowering the cover until the board is exposed. Replace cover after changing the transmitter selection.

AUTOMATIC REVERSING

The door will auto-reverse when an obstacle is

Encountered to prevent injury to the obstruction and damage to the door Size and Setting Pots. should be set to match door size per Page 19:-

When set correctly, the door will reverse on meeting an obstacle when closing. Set the door to the lightest setting first. Note that too light a setting will result in false reversals a hand force of 5 to 10 kg under the bottom rail during closing should normally be sufficient to reverse the door. Force to reverse should not exceed 150 Nm.

WARNING IF THE DOOR DESCENDS WHILE YOUR CAR IS UNDERNEATH, DO NOT ATTEMPT TO DRIVE OUT RELY ON THE AUTOREVERSING. HOWEVER NO LIABILITY FOR DAMAGE TO THE VEHICLE WILL BE BOUND BY GLIDEROL DOORS.

LIGHT TIMER

The internal light will operate for approximately 90 seconds.

AUTOMATIC DELAYED CLOSING

The door will close automatically after 90 seconds if PCB link AUTO is joined (refer diagram on page 17). When set into the auto-close position the door may be held open by pressing the button to stop the door just before the door is fully open. Alternatively just turn the power off. (Automatic delayed closing is not recommended without the installation of the optional photo cell.)

SAFETY FEATURES

The Glidermatic GTS has the following in built features:-

1. A patented feature is the electronic sensing device which automatically reverses a closing door should an obstruction restrict the downward movement and also stops movement should the door be obstructed when opening. The same sensing device protects the electric motor.

2. The voltage of the unit is transformed down to 24 volts.

3. Compatibility with a PE Cell across the opening to stop movement should the opening be obstructed.

ADDITIONAL TRANSMITTERS

Up to 15 transmitters can be used on each power head. Optional multi user receivers can be purchased and will accept up to 500 transmitters.

REMOTE PUSH BUTTON

A non-illuminated bell press may be mounted anywhere in your home or garage to permit opening or closing of your door from a convenient location. In some cases the connecting cable may require to be a shielded type

EXTERNAL LAMP

With the installation of a small accessory board, the Glidermatic GTS will allow the connection of auxiliary lighting, i.e. Drive way lighting, internal garage lights.

NB: Max Load 100W

! WARNING All mains lighting must be fitted by a qualified Electrician / Personnel

EXTERNAL KEY RELEASE / SWITCH

These units are available separately or combined and are recommended for situations where no other personnel access is available to the garage (Key Release) or where door opening is desired without use of a hand set (Key Switch). The units are located by the outside of the door and are directly attached to the manual release cable and/or by direct connection to the circuit board.

EMERGENCY INSTRUCTIONS

IF YOUR DOOR DOES NOT OPERATE

You should always carry out the following operational checks before calling a serviceman. The instructions below relate to gaining access to your garage and rendering the garage both safe and secure for manual door operation.

A: ELECTRICAL POWER FAILURE -WHEN ACCESS IS AVAILABLE

Step 1: Switch off the power at the power point and remove the plug from the socket.

Step 2: Pull the manual release cable to put the door to the manual operation.

GLIDEROL® GARAGE DOORS
Opening doors around the world

B: ELECTRICAL POWER FAILURE
- WHEN ACCESS IS NOT AVAILABLE

These doors should have an External Keyed Release attached adjacent to the door to permit immediate access into the garage.

Step 1: Use the External Keyed Release to free cord and pull the manual release cable.

Step 2: Restore the key barrel unit into the External Keyed Release body and withdraw the key.

Step 3: Manually raise the door.

Step 4: Switch off the power and remove the plug from the socket.

The door may now be opened and closed manually and secured using the normal door centre lift lock. When power is restored ensure the door lock is withdrawn before replacing the plug and switching on again. The Glidermatic GTS will overload or be permanently damaged if operated with the door locked.

Photo Sensor Connection Diagram

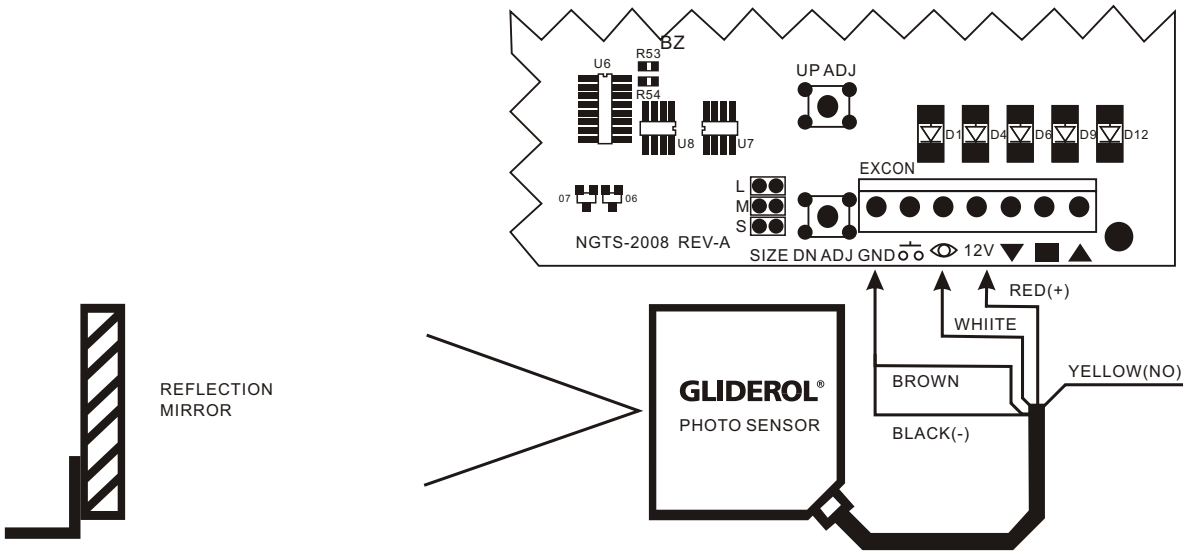

Please refer to technical information provided with the sensor.

Remote Switch Connection Diagram

One Button Switch

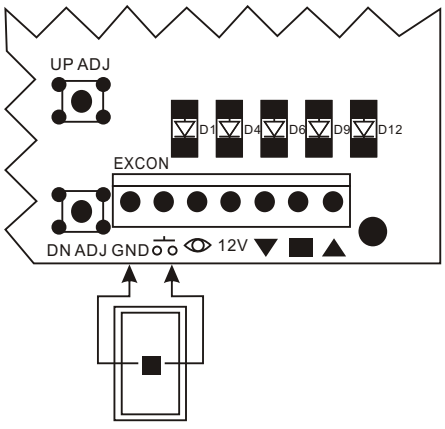

Three Button Switch

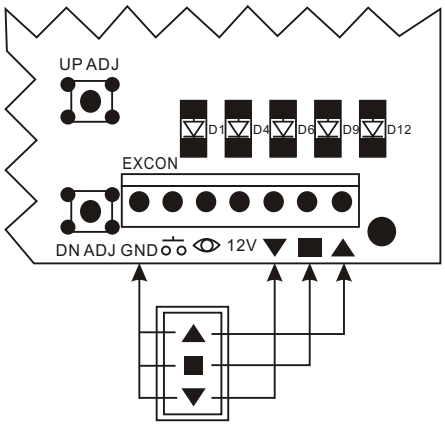

DO

- Record the serial number of the unit
- Remember that a normal common sense approach to all components will result in years of satisfactory service
- Check the fault finding chart before you call for service
- Remove the plug from the power socket to isolate the unit
- Complete the warranty form
- Change the hand set battery periodically
- Treat the hand set with care - most such faults are caused through dropping the transmitter
- Check the springing in the door by reverting to manual position and opening by hand.

DON'T

- Do not lock the boor manually whilst power is applied to the unit
- Do not continuously operate the unit of "play" with the transmitter
- Do not hold the hand set button down for more than 1 to 2seconds as this may cause the door to auto reverse and will flatten the battery quickly
- Do not operate the door until it is in view
- Do not attempt to stop the door from moving unless it is a deliberate check of the sensitivity setting on the circuit board.

GLIDEROL®
GARAGE DOORS
Opening doors around the world

How to Avoid Costly Service Bills

PROBLEM	ACTION
1. Door does not operate	Check electrical supply to unit. Press hand set and/or bell press button again.
2. Drive motor operates but door does not move.	Manual release cable is in the engaged position and engaged in drive (move door manually to re-engage).
3. Drive motor operates when manual release cable is engaged and does not move.	Manual release cable is broken and requires replacing. Check by attempting to move the door manually when the motor has stopped running.
4. Door auto-reverses after closing fully.	Check setting of limits relative to the lower limit switch - unit must stop using the limit switch NOT by striking ground
5. Door stalls at fully open position and continues to try the door if button is pressed again.	Check setting of limits relative to the lower limit switch - unit must stop using the limit switch NOT by striking the guide top stop.
6. Door open and closed positions incorrect	Reset electronic limit switches.
7. Courtesy light comes on but door dose not move.	Check that the manual release cable is engaged
8. Hand set range diminished.	Replace hand set battery after 6 - 12 months. Check position of antenna on unit to ensure it is relatively straight and not adjacent to the power cord.
9. Hand set does not open door.	Replace hand set battery after 6 - 12 months. Check position of antenna on unit to ensure it is relatively straight and not adjacent to power cord Check that the hand set has been programmed for the door.
10. Door auto reverses before it is closed.	Check the sensitivity setting on the circuit board. Check the door is not jammed in tracks.
11. Door stops during opening	Check the sensitivity setting on the circuit board. Check the door is not jammed in tracks
12. Door does not operate and the courtsey lamp is not on.	Check power is switched on. Check fuse on circuit board and replace. Check the door is not jammed in tracks. Check main power circuits

A. The manufacturer, Gliderol Garage Doors (the Manufacturer), a division of Gliderol International Pty Ltd, of 32 Jacobsen Crescent, Holden Hill, South Australia, 5088 warrants to the original purchaser (the Vendee) that the Panel Glide (the Unit) including every major component thereof will be free from defects in materials and workmanship in normal operation for a period of twelve (12) months and for motor for a period of 3 years only from the date of installation where installation is effected by the Manufacturer or one of its Authorised Distributors or otherwise from the date of purchase. Excludes battery, fuses, and light globes which has no warranty.

B. (1) Where the unit has been installed on a Gliderol Garage Door by the Manufacturer or its Authorised Distributor, the Manufacturer warrants such installation shall be free from defects in material or workmanship and that the Vendee shall be entitles to free service by the Manufacturer or its Authorised Distributors to remedy any such defect. Any service calls made by the Manufacturer or its Authorised Distributors for the purpose of adjustments and, in the opinion of the Manufacturer not to remedy a defect to which this Warranty relates will be paid for by the Vendee.

B. (2) Where the unit has not been installed on a Gliderol Garage Door by the Manufacturer or its Authorised Distributor, in addition to any warranty offered by the installer, the Manufacturer will within twelve (12) months after the date of purchase and after notification of the defect by the Vendee and on the return of the defective part of the door repair or at its option, replace any defective part of the door without charge provided disconnection, re-installation and freight costs shall be borne by the Vendee.

C. Vendee to give Notification and Proof

The Vendee must immediately notify either the Manufacturer or its Authorised Distributor in the event of any alleged defect in the Unit and must establish or reasonable satisfaction of the Manufacturer or its Authorised Distributor the date of purchase or installation (as the case may be) by way of invoice or the completed Warranty Form contained in this Manual.

D. Future Modification

The Manufacturer reserves the right to modify any existing or future models of the door without incurring any obligation to incorporate such modifications in doors already manufactured or to which this Warranty may relate.

E. General

Subject to paragraph F and G the obligations of the Manufacturer or its Authorised Distributor under this Warranty are limited to those contained above and this warranty made by the Manufacturer and exclusively and expressly in lieu of all other warranties permitted to excluded by law whether these warranties are express, implied, under common law or by statute and the terms of the warranty may Not be modified by person, firm or corporation other than the Manufacturer.

F. Exclusions

This Warranty does not extend to or affect the Manufacturer or its Authorised Distributor in the event that any defects or malfunctions of the Panel Glide are due to or result from:

1. Lack of proper care or maintenance of the door.
2. Incorrect, improper or unreasonable use.
3. Faulty installation or adjustment which is not carried out by the Manufacturer or its Authorised Distributor.
4. Failure to observe any instructions or directions provided with the door or given to the Vendee by the installer.
5. Attempted modifications or repairs carried out by an unauthorised person.
6. Faulty or unsuitable structures to which the Unit is affixed.
7. Radio (including citizen band transmissions) or any other electronic interference.
8. Water damage voids the existing warranty on all electronic components.

G. The Manufacturer strongly recommends that the Glidermatic GTS2000 Sectional Overhead Door Operator be serviced by an Authorised Gliderol Distributor or Gliderol Technician every 18-24 months to ensure longevity of the products life.

H. Statutory Warranties

It is expressly provided that this Warranty or any terms and conditions of it or any other literature provided to the Vendee shall not be read or applied so as to purport to exclude, restrict or modify or have the effect of so doing the application in relation to the supply of the Unit of all or any of the provisions of division 2 and 2a of Part V of the Trade Practices Act, 1974 (the Act) as amended or the exercise of a right conferred by such provision or any liability of the Manufacturer or its Authorised Distributors for breach of a condition or warranty implied by such provisions or any other condition or warranty implied by any relevant State Act or Territorian Ordinance or by the General Law and which by law cannot be excluded. Restricted or modified provided that to the extent that the Act permits the Manufacturer to limit his liability for a breach of a condition or warranty implied by the Act then the Manufacturer's liability for such breach shall be limited to the payment of the cost of replacing or repairing the goods or acquiring equivalent goods.

GLIDEROL® GARAGE DOORS
Opening doors around the world

Warranty Form

Name ..... Address .....

.....

Product Type ..... Installation Date .....

Supplier (Distributor) .....

Installer ..... Phone No .....

Address .....

Installer's Signature .....

NOTE:
THIS FORM MUST BE COMPLETED BY THE INSTALLER AND PRODUCED AS PROOF OF PURCHASE DATE WHEN MAKING A SERVICE CALL UNDER WARRANTY, OTHERWISE SUCH CALLS ARE LIABLE TO SERVICE CHARGES.

FOR SALES AND SERVICE, CONTACT

GLIDEROL INTERNATIONAL PTY LTD ABN 92 007 928 949

Head Office
Gliderol Garage Doors
32 Jacobsen Crescent, Holden Hill, SA 5088
Phone (08) 8261 9633 Fax (08) 8261 9700

Victoria
Gliderol Garage Doors
23 Kitchen Road, Dandenong, VIC 3175
Phone (03) 9793 5455 Fax (03) 9706 8492

New South Wales
Gliderol Garage Doors
45 Sammut Street, Smithfield, NSW 2164
Phone (02) 9725 1033 Fax (02) 9725 1115

Queensland
Gliderol Garage Doors
241 Elliott Road, Banyo, QLD 4014
Phone (07) 3260 9000 Fax (07) 3260 9055

Western Australia
Gliderol Garage Doors
21 Prindiville Drive, Wangara, WA 6065
Phone (08) 9409 3000 Fax (08) 9409 3200

New Zealand
Gliderol Garage Doors NZ
12 Cape Hill Road, Pukekohe
Phone (09) 8350 211 Fax (09) 2370 440

United Kingdom
Gliderol Garage & Industrial Doors Ltd
1 Davy Drive, South West Industrial Estate,
Peterlee County, Durham SRB 2JF, UK
Phone 0191 518 0455 Fax 0191 518 0548

OR YOUR LOCAL SUPPLIER

GLIDEROL® GARAGE DOORS
Opening doors around the world